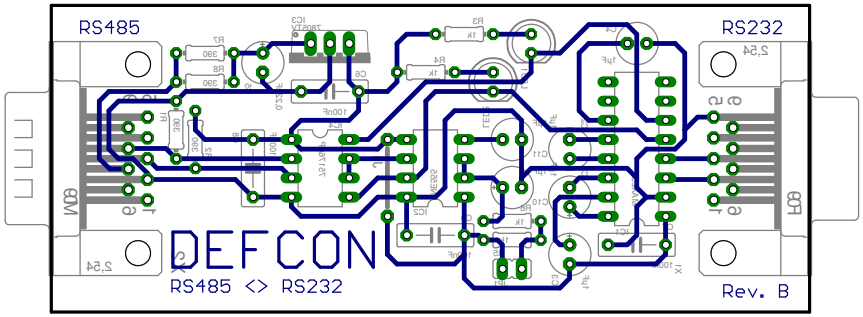
RS485
RS232
DEFCON
RS485 <> RS232
Rev. B